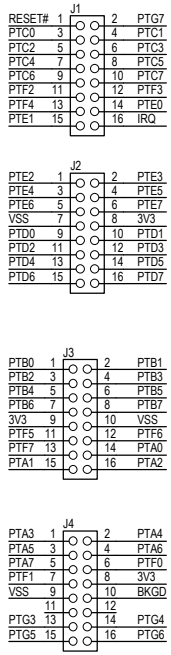

SIGNAL PINS

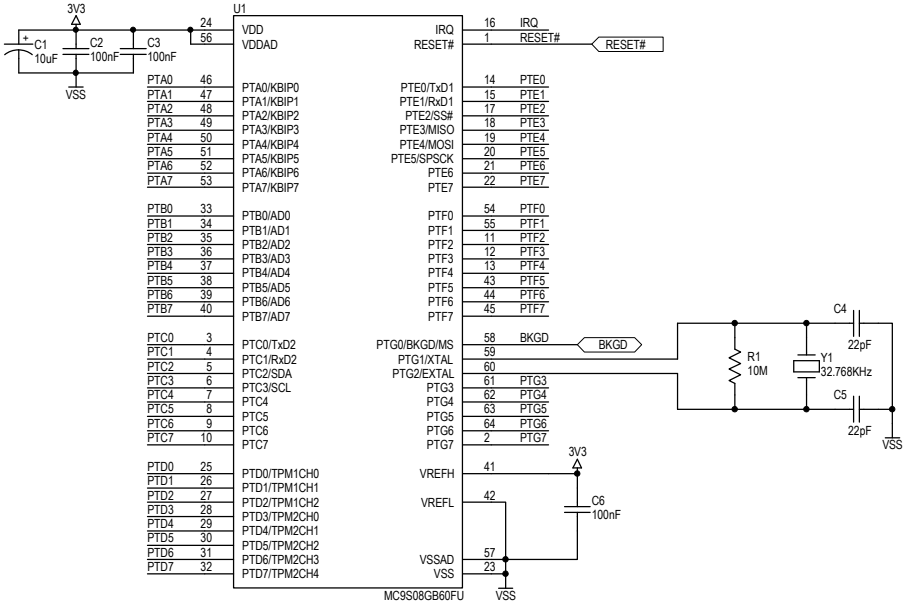

MCU

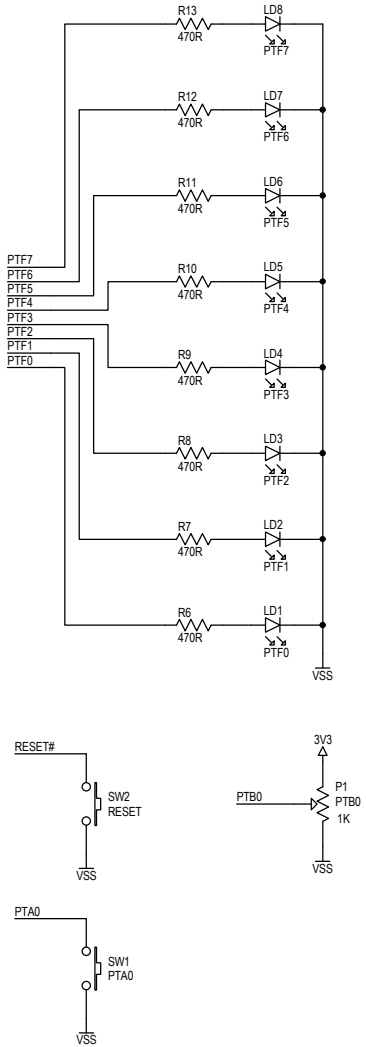

DEMO

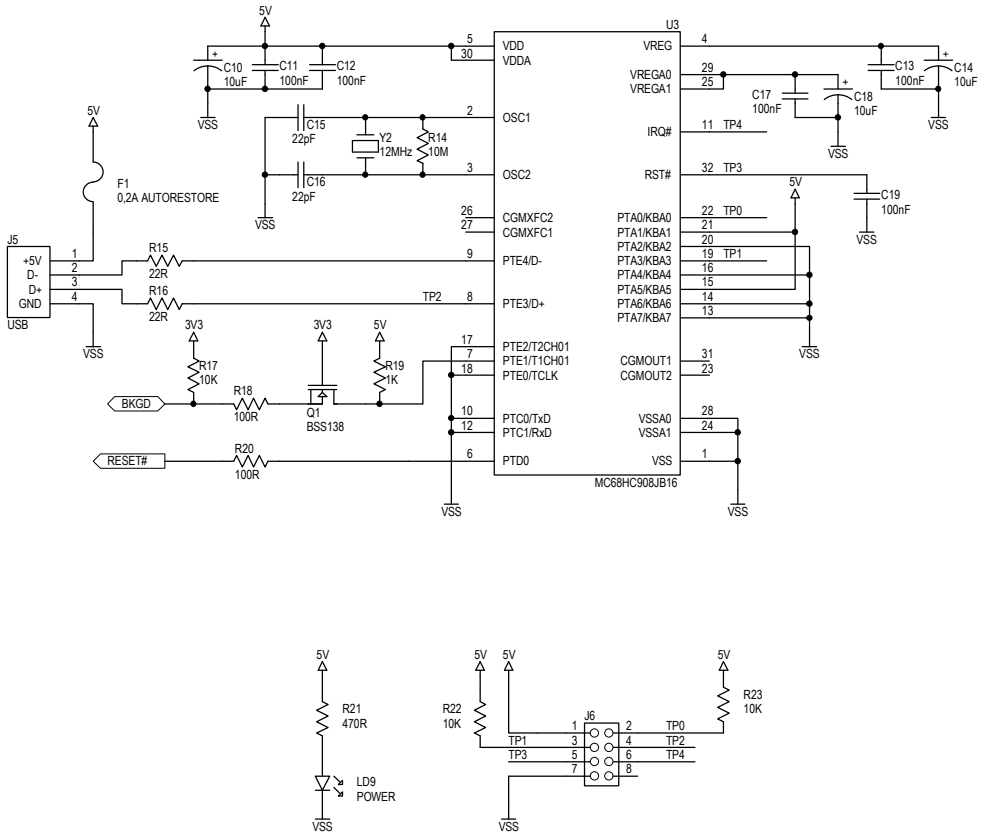

USB TO BDM INTERFACE